17562.0484.0 REV1

Spare Parts List

ADVANCE 25C 47–583–43
ADVANCE 30C 47–583–44
ADVANCE 35C 47–583–45
ADVANCE 25S 41–583–33
ADVANCE 30S 41–583–34

Issue 12/2017

Table description	Issue	n. of pages
Overall view	12/2017	1
C.h. return group and d.h.w. heat exchanger	12/2017	1
C.h. flow group and three way diverter valve	12/2017	1
C.h. flow and return groups	12/2017	1
Pump and main circuit assembly	12/2017	1
Gas assembly	12/2017	1
Valves and connection pipes combi	12/2017	1
Valves and connection pipes system	12/2017	1
Control panel and ignition device	12/2017	1
Wiring combi	12/2017	1
Wiring system	12/2017	1
Fan, combustion chamber and case panels	12/2017	1
List of parts combi	12/2017	7
List of parts system	12/2017	6

ADVANCE 25C	47-583-43
ADVANCE 30C	47-583-44
ADVANCE 35C	47-583-45
ADVANCE 25S	41-583-33
ADVANCE 30S	41-583-34

Overall view

DATA BADGE: inner side of left case panel

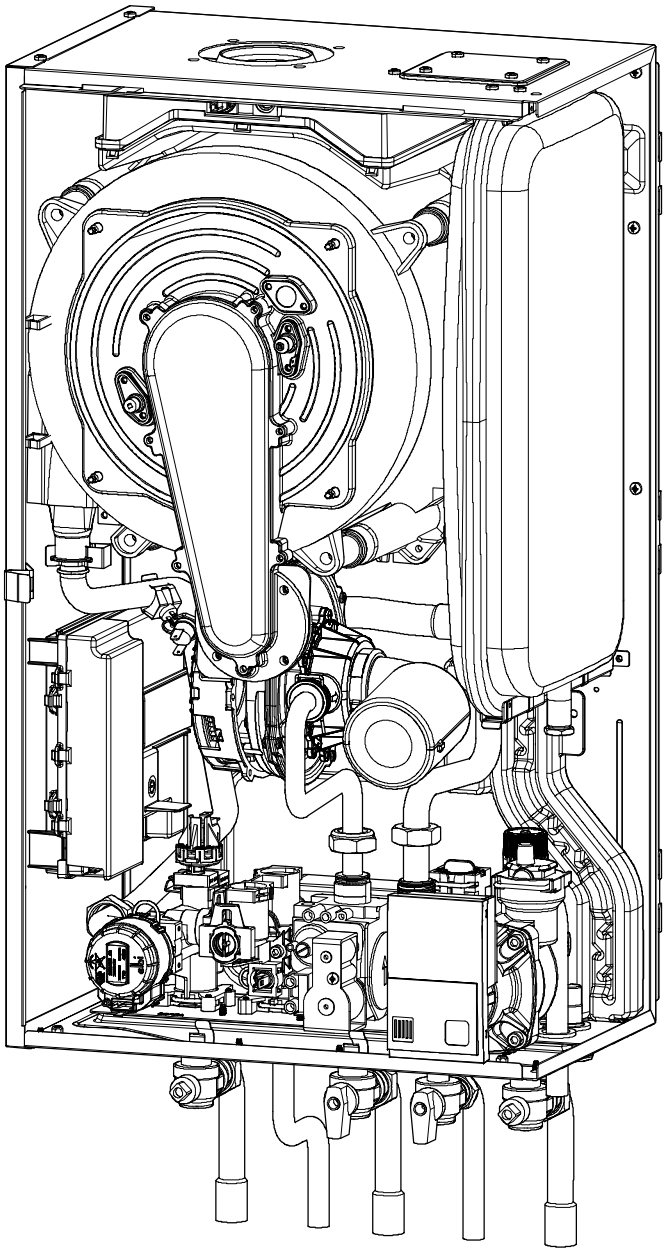

ADVANCE 25C 47-583-43
ADVANCE 30C 47-583-44
ADVANCE 35C 47-583-45

C.h. return group and d.h.w. heat exchanger

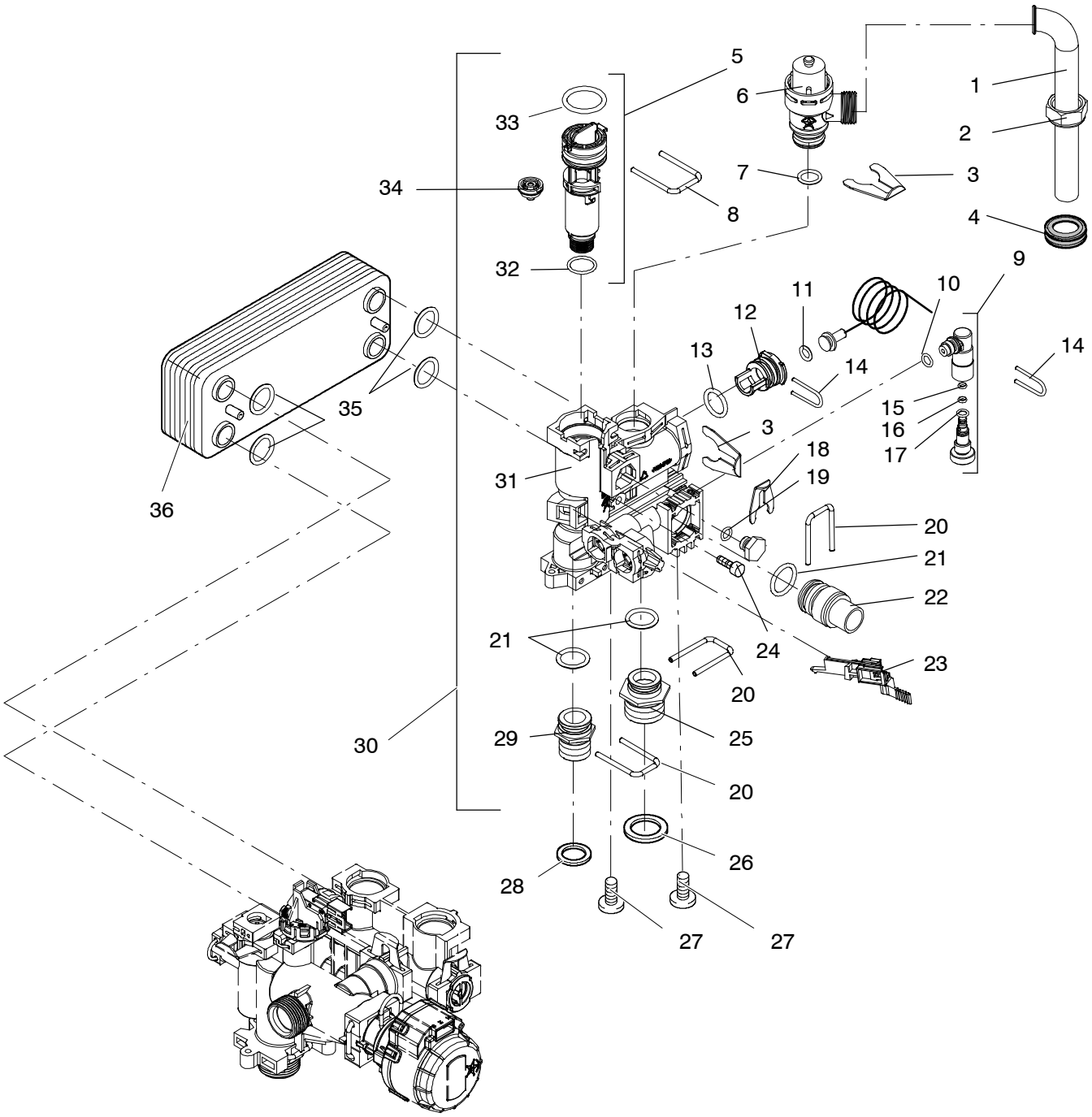

ADVANCE 25C 47-583-43
ADVANCE 30C 47-583-44
ADVANCE 35C 47-583-45

C.h. flow group and three way diverter valve

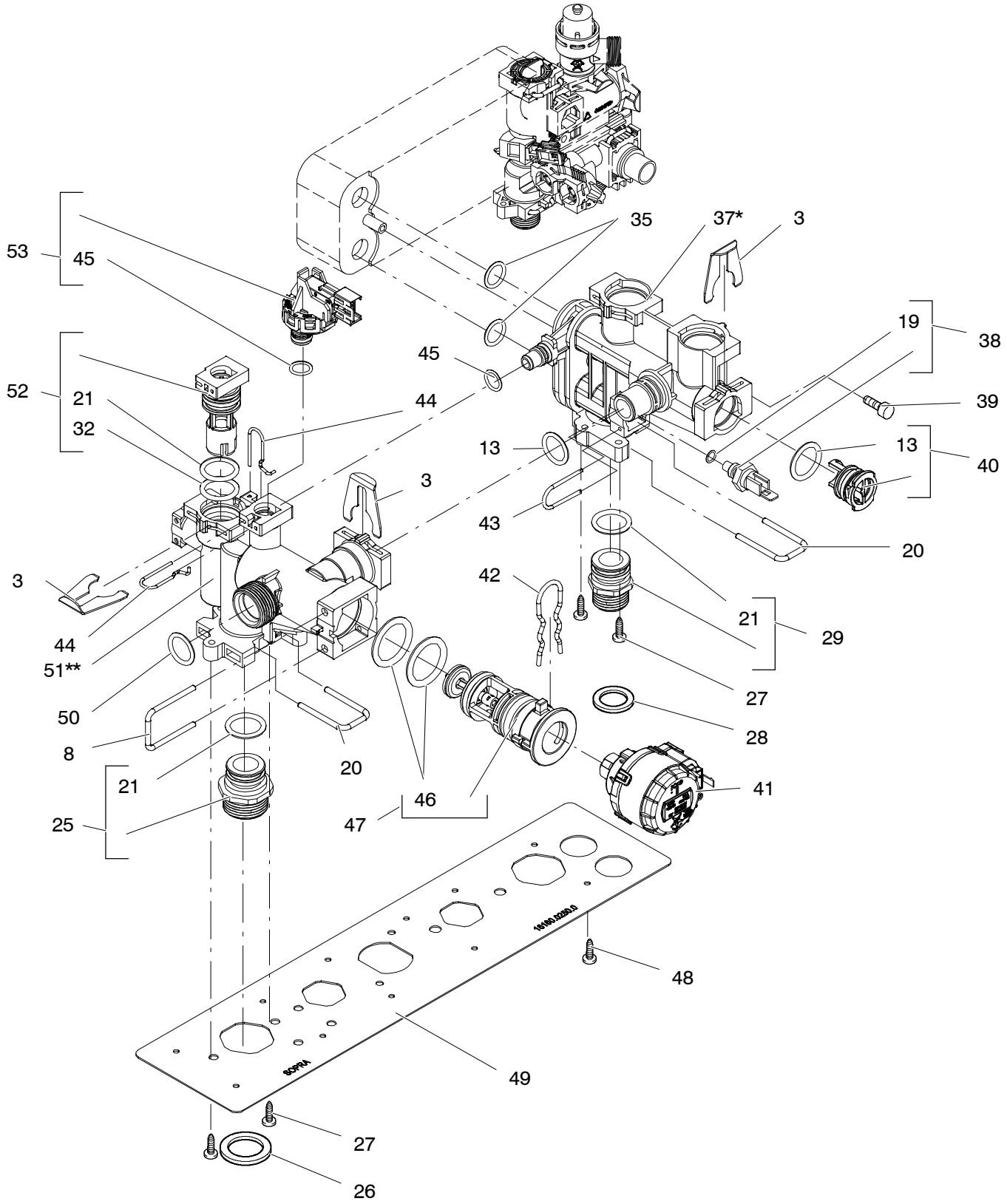

* Includes items 35, 19, 13, 21, 45

** Includes items 50, 13, 21, 46, 45, 32

C.h. flow and return groups

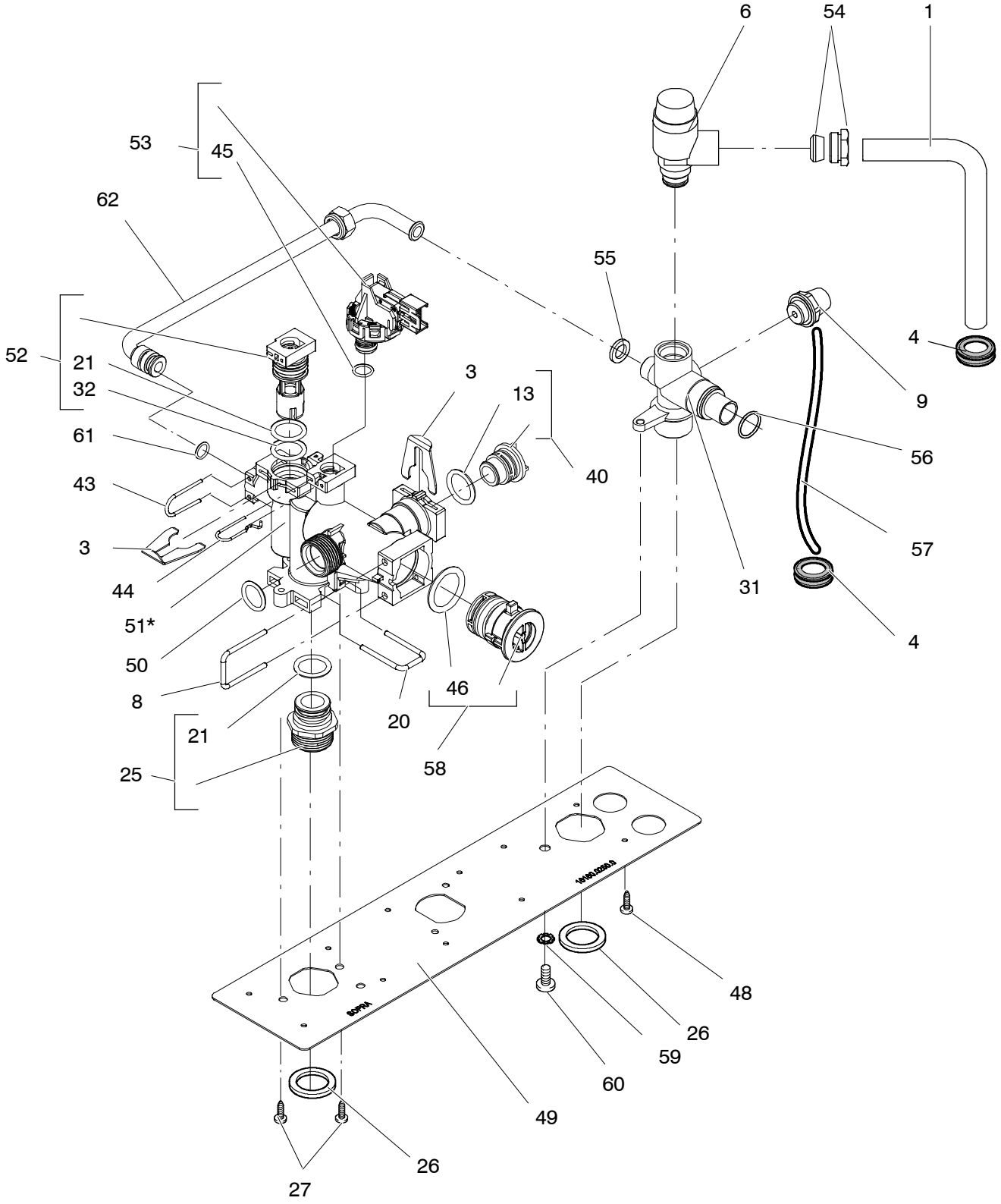

* Includes items 50, 61, 13, 21, 46, 45, 40, 58, 32

ADVANCE 25C	47-583-43
ADVANCE 30C	47-583-44
ADVANCE 35C	47-583-45
ADVANCE 25S	41-583-33
ADVANCE 30S	41-583-34

Pump and main circuit assembly

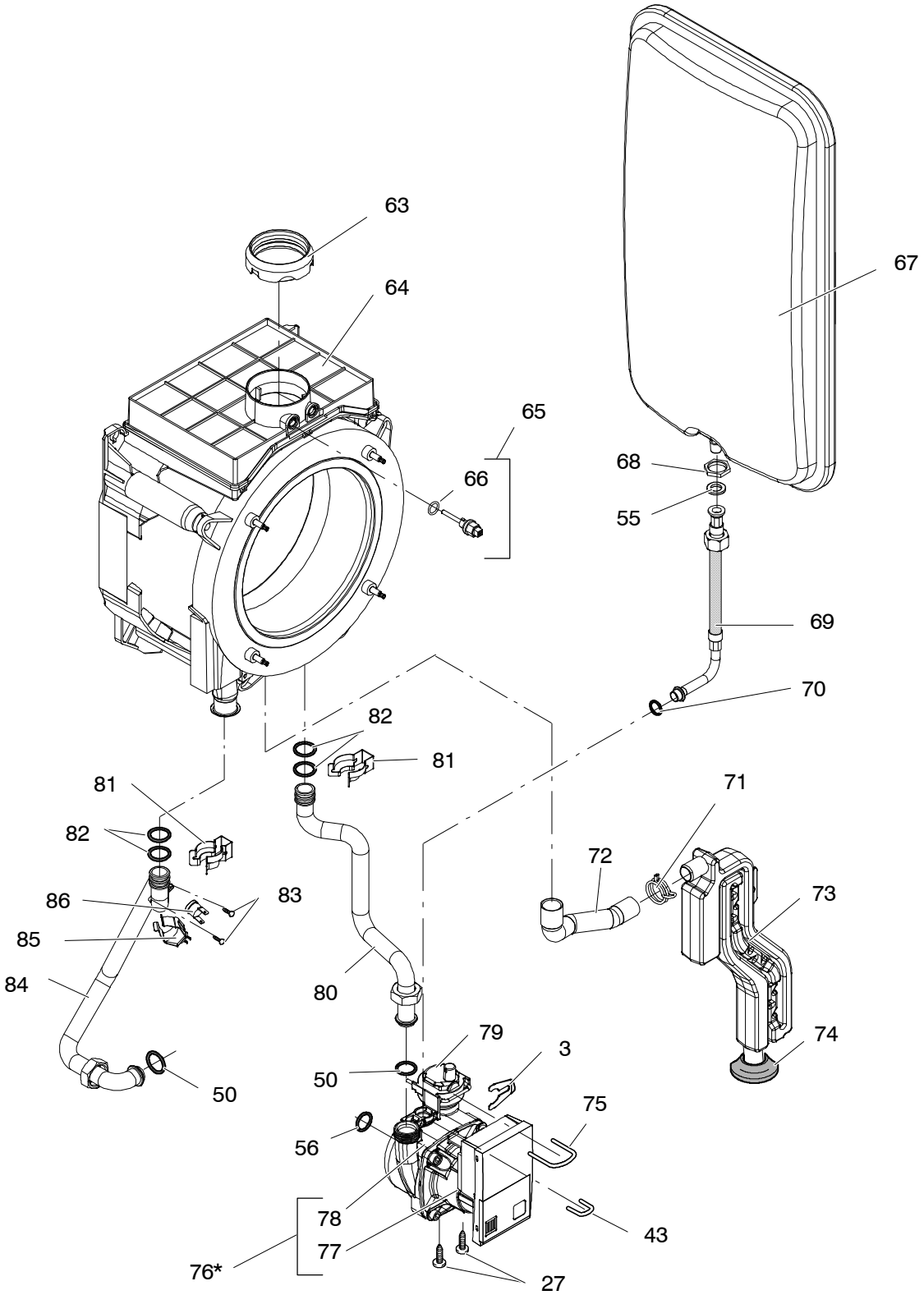

* Includes items 75

ADVANCE 25C	47-583-43
ADVANCE 30C	47-583-44
ADVANCE 35C	47-583-45
ADVANCE 25S	41-583-33
ADVANCE 30S	41-583-34

Gas assembly

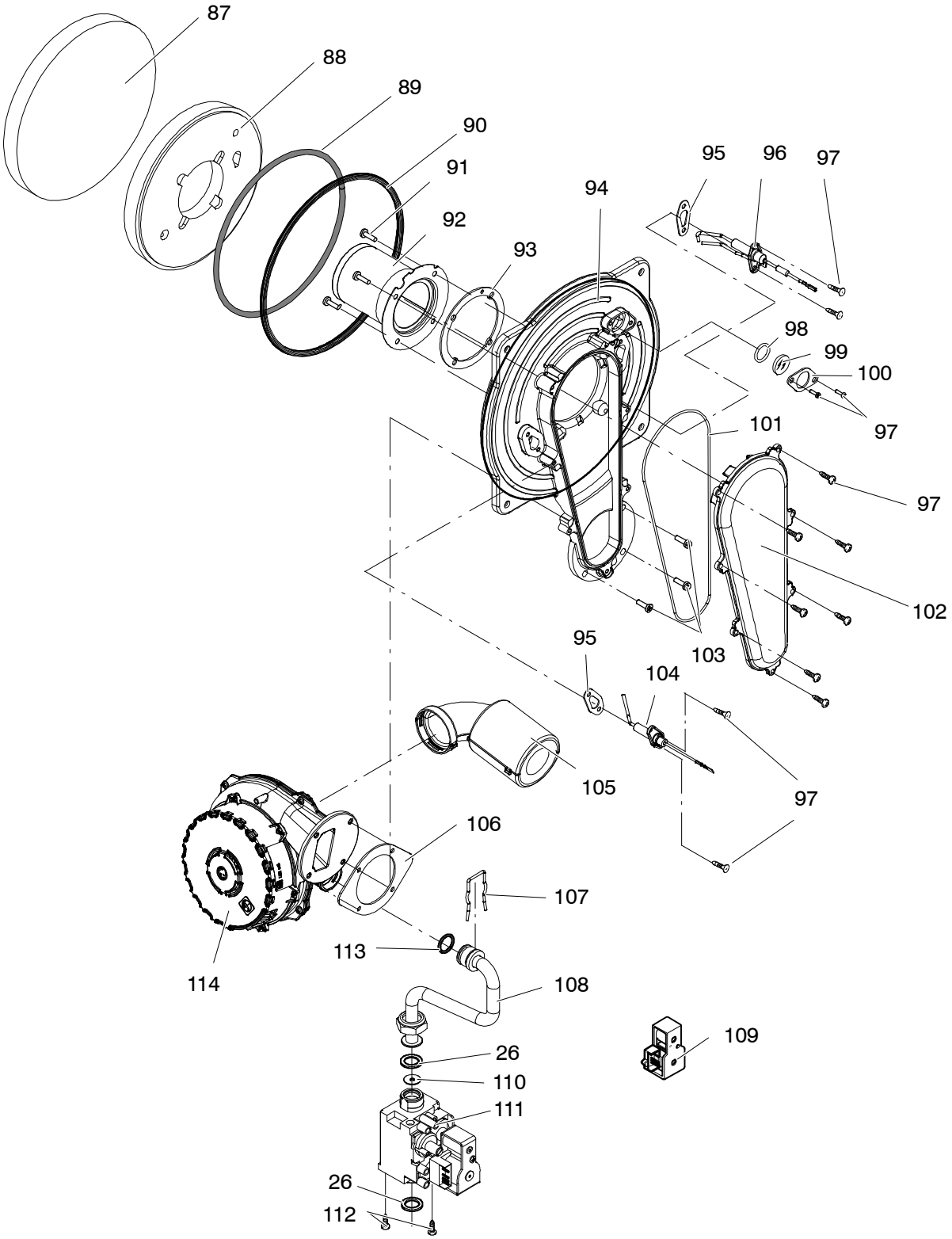

ADVANCE 25C 47-583-43
ADVANCE 30C 47-583-44
ADVANCE 35C 47-583-45

Valves and connection pipes

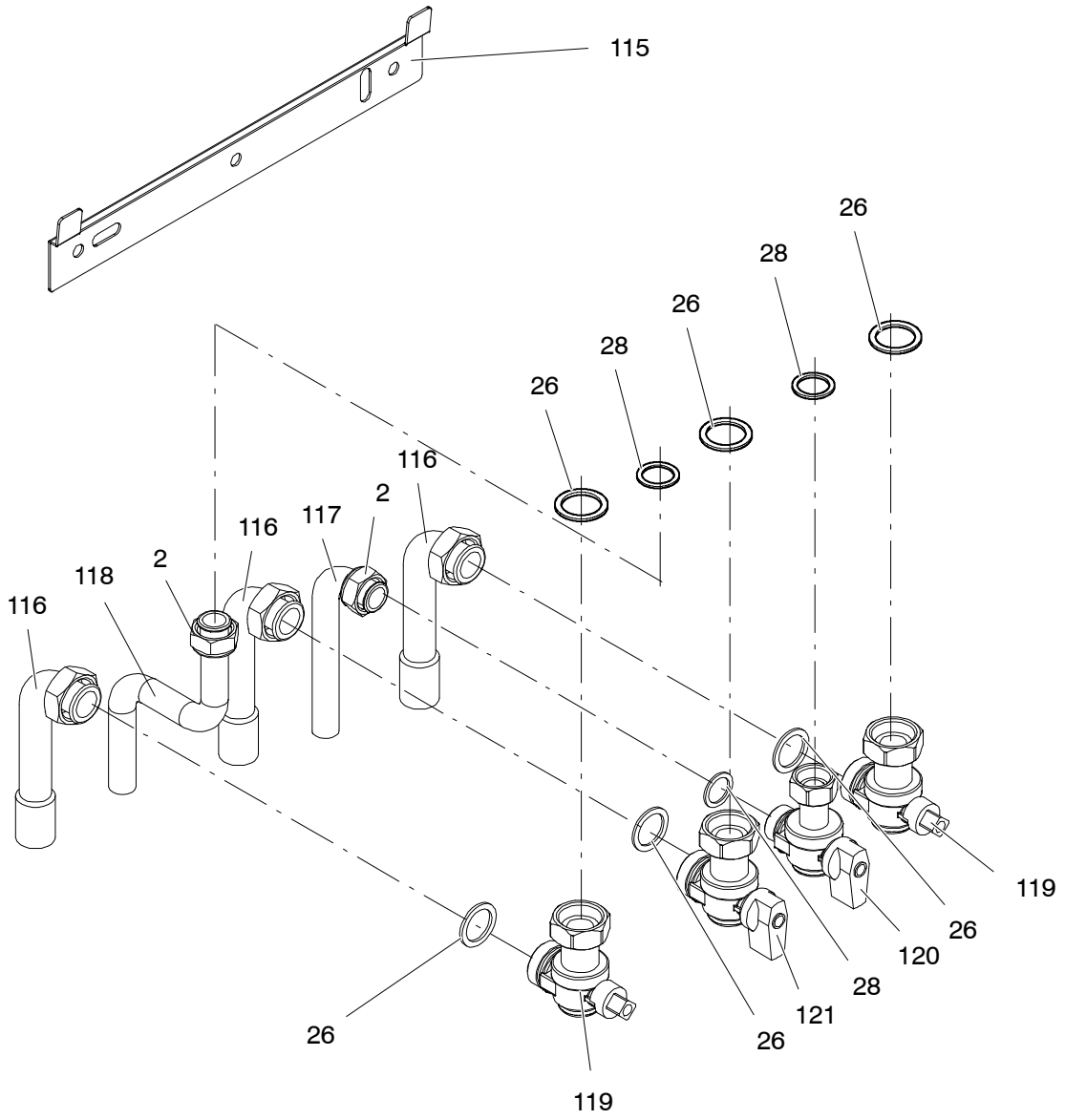

Valves and connection pipes

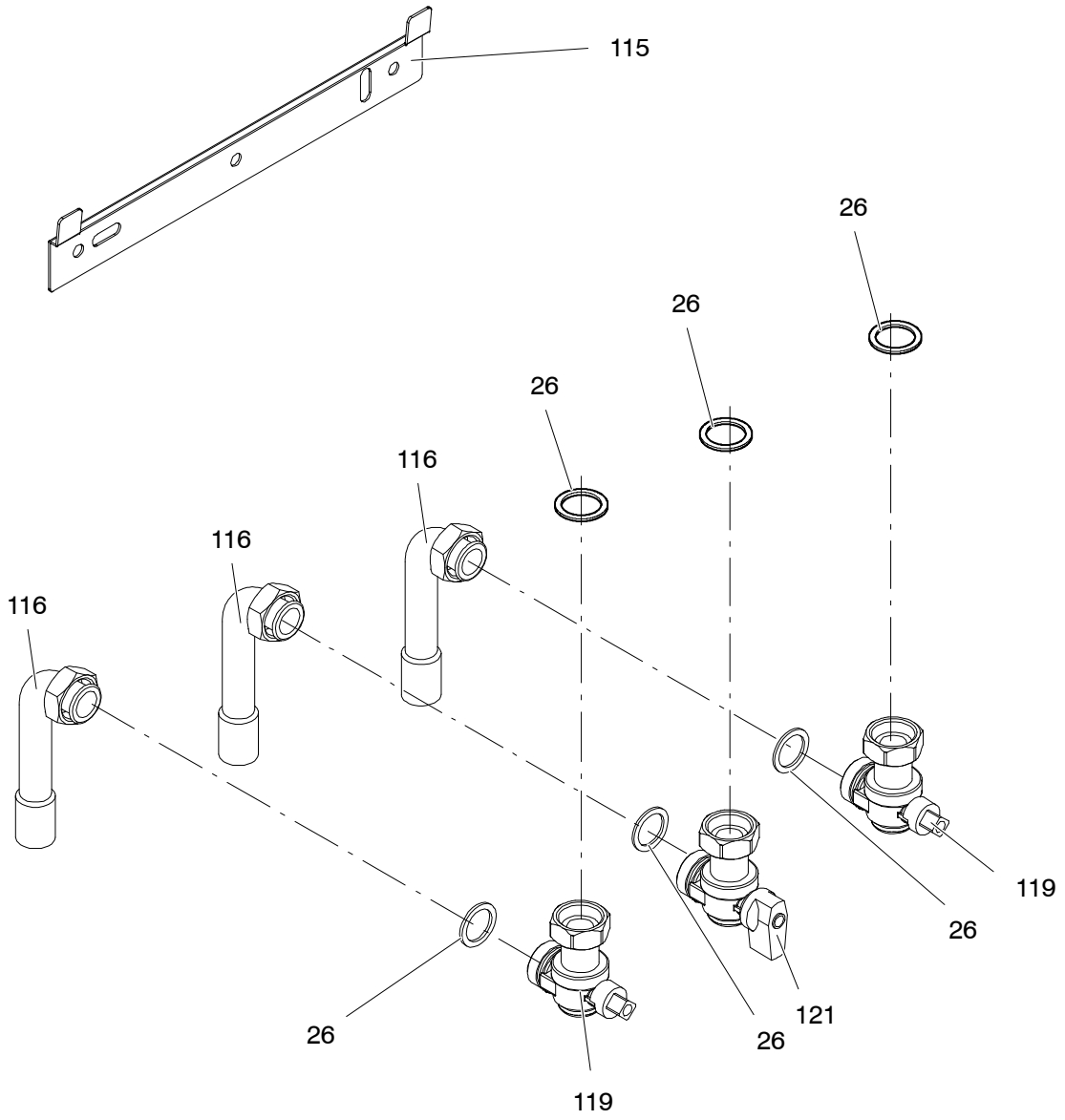

ADVANCE 25C	47-583-43
ADVANCE 30C	47-583-44
ADVANCE 35C	47-583-45
ADVANCE 25S	41-583-33
ADVANCE 30S	41-583-34

Control panel and ignition device

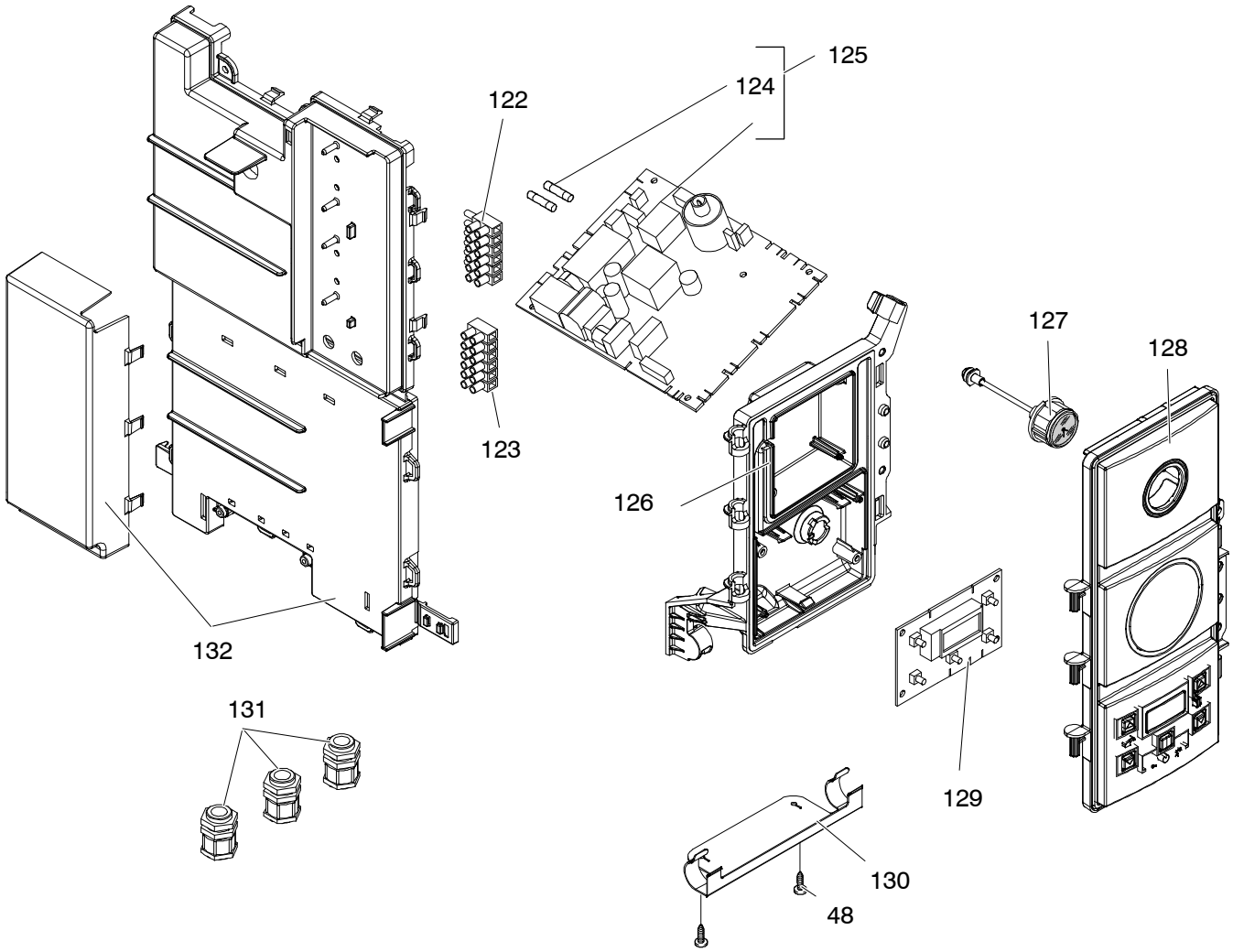

ADVANCE 25C 47-583-43
ADVANCE 30C 47-583-44
ADVANCE 35C 47-583-45

Wiring combi

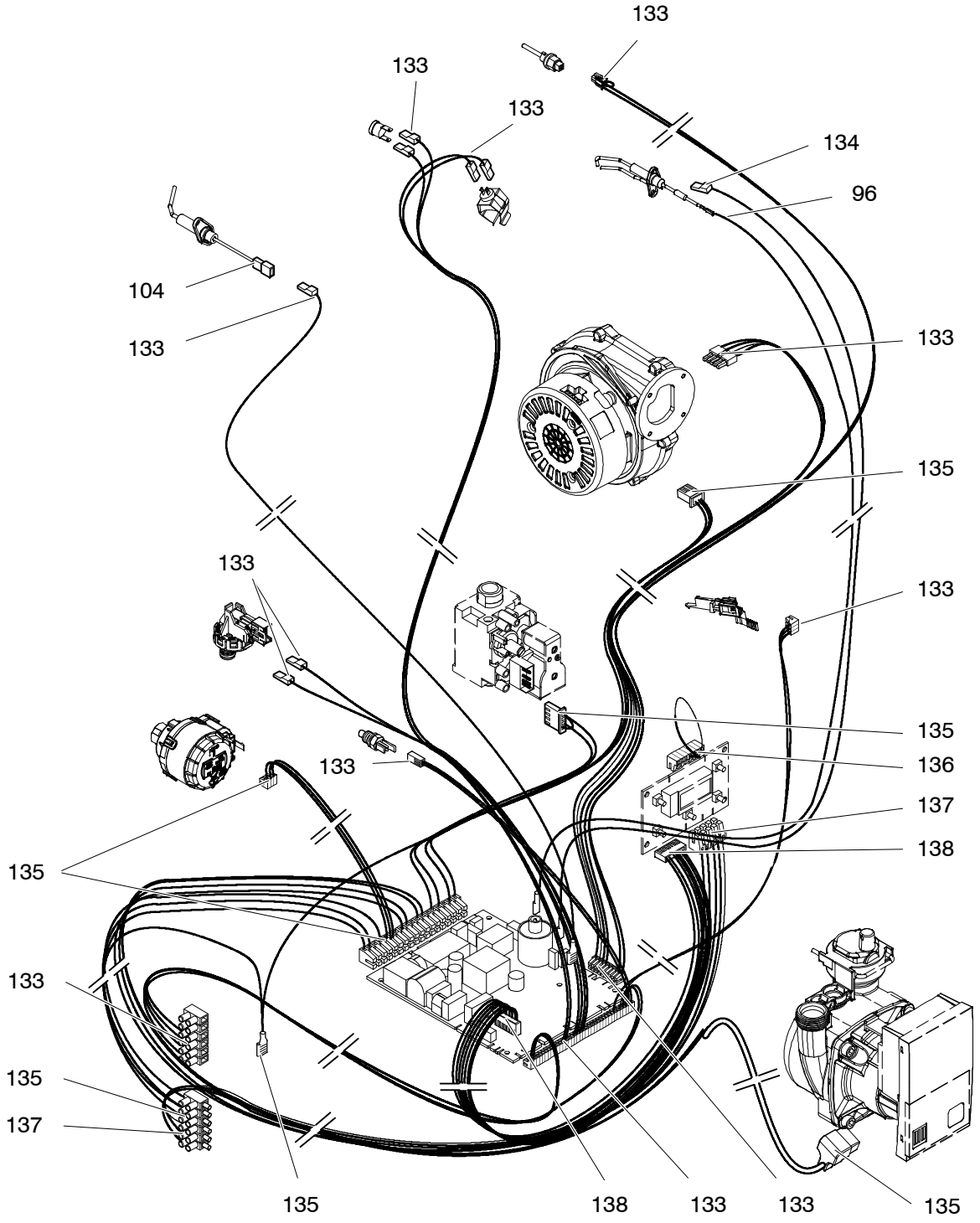

Wiring system

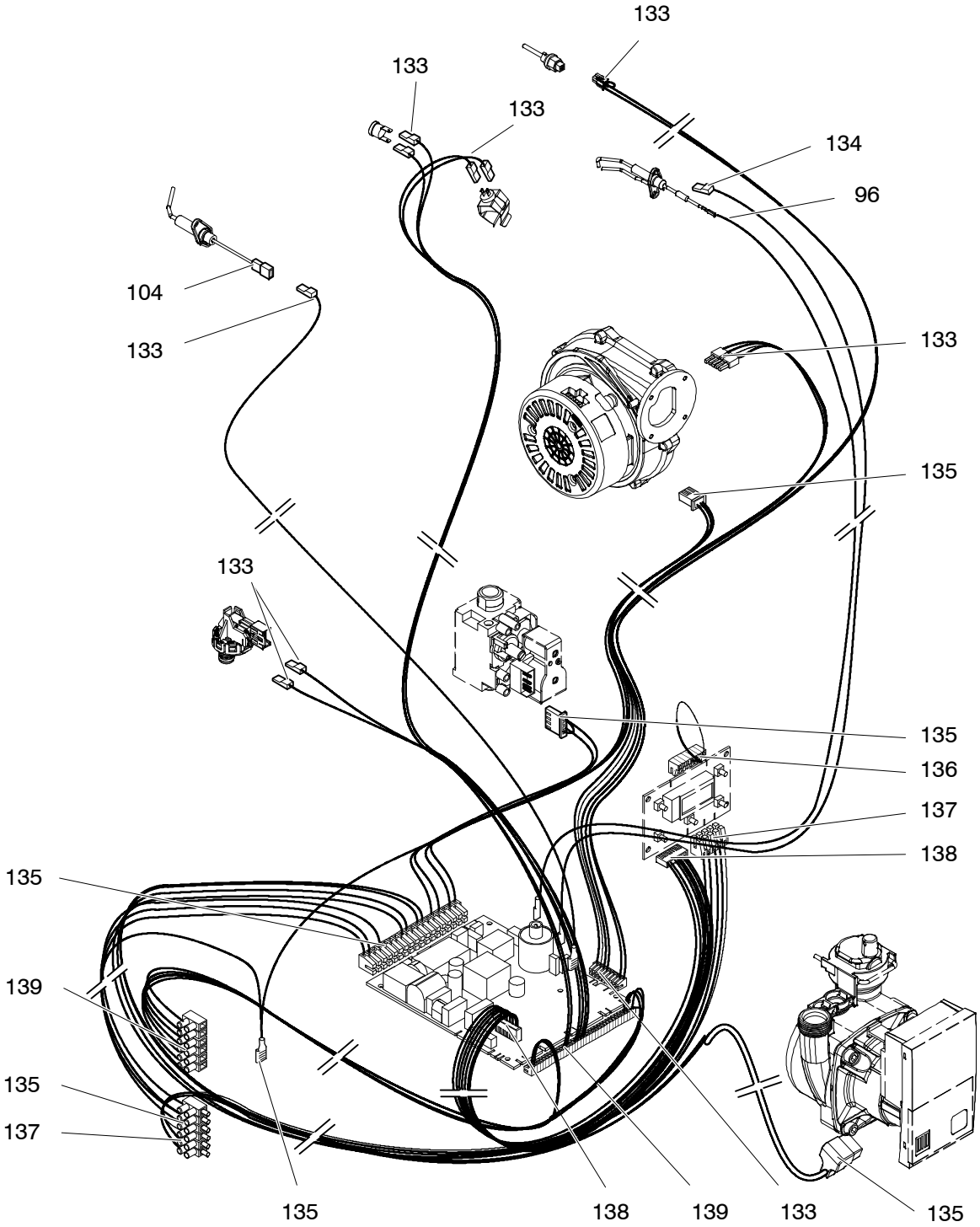

ADVANCE 25C	47-583-43
ADVANCE 30C	47-583-44
ADVANCE 35C	47-583-45
ADVANCE 25S	41-583-33
ADVANCE 30S	41-583-34

Sealed chamber and case panels

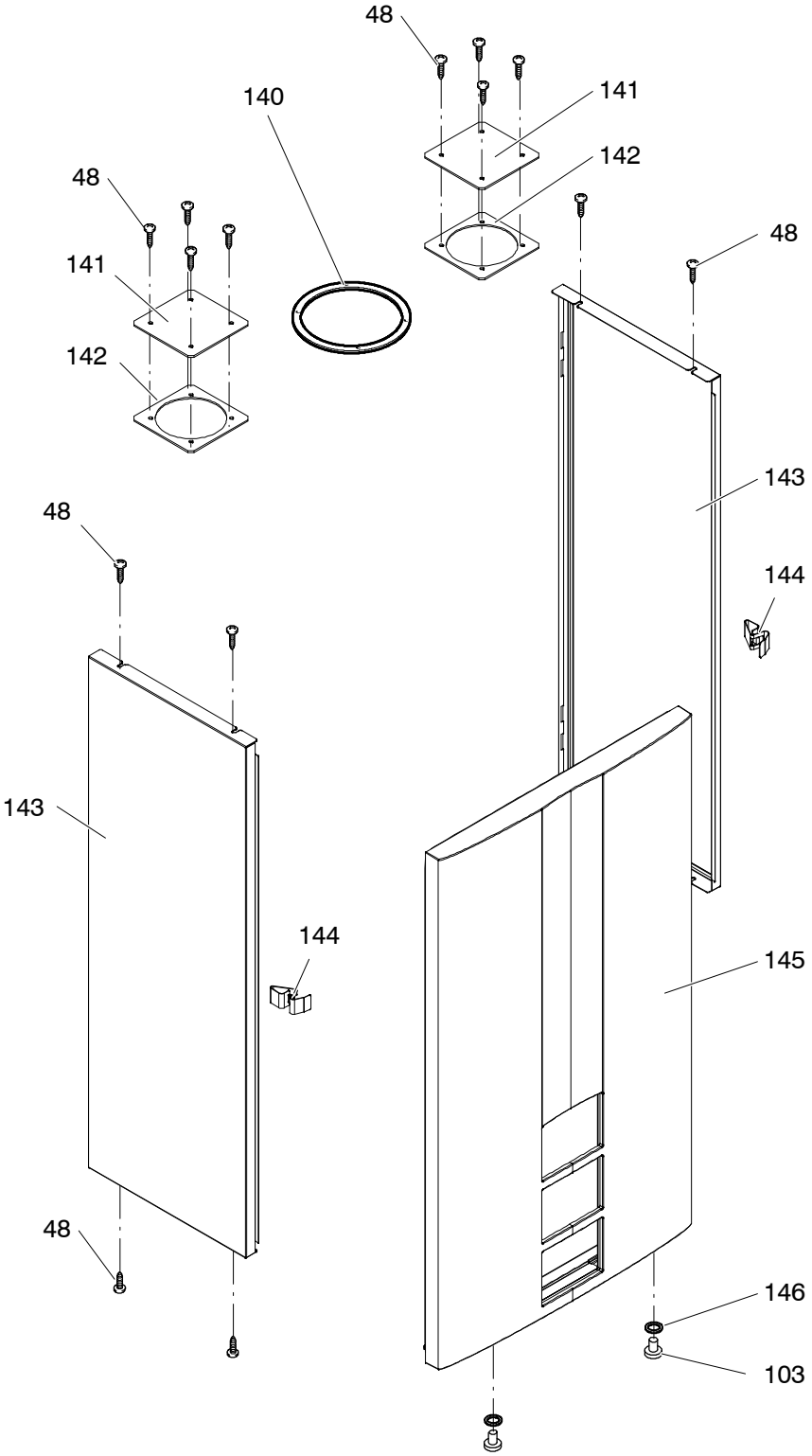

DRAFT BRITSH GAS PART LIST

Date _____
Sheet 1 of 7
Manufacturer Biasi SpA – Italy
Appliance(s) ADVANCE 25CADVANCE 30CADVANCE 35C,
GC Appliance Number(s) 47–583–4347–583–44, 47–583–45
Contract Name
Telephone Number

(a) Key no.	(b) GC Part Number	(c) Description	(d) No. Off	(e) Makers part number which have a CG number	(f) Maker's old part number which have since been changed	(g) Maker's new part number which DO NOT have a GC number	(h) M B F	(i) Original Supplier	(j) Original Supplier part number	(k) Retail price excl. VAT
		Position of data badge: frame, inner lower side								
		Instructions booklets set	1			BI1913 540	M			
1		Safety valve connection pipe	1			BI1441 100	M			
2	E01–226	Nut 1/2"	1	BI1004 101			M			
3	H20–987	Pump connection fork	7	BI1262 116			M			
4		Grommet	2			BI1301 109	M			
5		Magnetic flow switch and filter kit	1			BI1441 501	M			
6		Safety valve 3 bar	1			BI1441 101	B		3 bar	
7		O–ring gasket 2,62x15,88	1			KI1042 110	M			
8	H74–542	Fork P26	1	BI1351 115			M			
9	H50–398	Drainage valve	1	BI1181 501			M			
10	H50–484	O–ring gasket 1,78x7,66	2	BI1182 108			M			
11	E83–144	O–ring gasket 1,78 x 6,75	1	BI1475 119			M			
12		Pressure gauge connection	1			BI1441 137	M			
13	H74–529	O–ring gasket 2,62x15,54	2	BI1351 102			M			
14	H50–473	Fork P.10,5	4	BI1181 107			M			
15	169–050	O–ring gasket 1,78x2,9	1	KI1043 145			M			
16	H50–488	O–ring gasket 1,78x3,69	1	BI1181 120			M			
17	169–014	O–ring gasket 1,78x6,07	1	KI1002 119			M			
18		Fork d. 12	1			BI1441 107	M			
19	169–102	O–ring gasket 1,9x5,7	1	KI1042 102			M			
20	H74–531	Fork P21,6	2	BI1351 104			M			
21	H20–970	O–ring gasket 2,62x17.86	2	BI1262 112			M			
22		Pump connection	1			BI1441 102	M			
23		D.h.w. flow switch	1			BI1441 104				

CONTINUATION SHEET

Sheet 2 of 7

Appliance number(s) 47–583–4347–583–44, 47–583–45

(a) Key no.	(b) GC Part Number	(c) Description	(d) No. Off	(e) Makers part number which have a CG number	(f) Maker's old part number which have since been changed	(g) Maker's new part number which DO NOT have a GC number	(h) M B F	(i) Original Supplier	(j) Original Supplier part number	(k) Retail price excl. VAT
24	402–941	Screw M5x30 – Hexagon socket cap	1	KI1217 115			M			
25	H74–541	Threaded connection c.h.	1	BI1351 114			M			
26	169–033	Flat gasket 3/4"	7	BI1001 108			M			
27	H74–535	Tapping screw 5x12	5	BI1351 107			F			
28	169–141	Gasket 1/2"	3	BI1001 106			M			
29	H74–533	Threaded connection d.h.w.	1	BI1351 106			M			
30		Return group kit	1			BI1441 500	M			
31		Return group	1			BI1441 103	M			
32		O–ring gasket 1,78x15,60	1			BI1441 105	M			
33	E00–680	O–ring gasket 2,62x23,47	1	BI1011 107			M			
34		Flow limiter 10 Litres/min	1			BI1441 106	M			
35	169–060	O–ring gasket 18,64x3,53	4	KI1043 144			M			
36	E01–204	Exchanger DHW – ADVANCE 25C	1	BI1001 101			M			
36 A	E01–205	Exchanger DHW – ADVANCE 30C, ADVANCE 35C	1	BI1001 102			M			
37		Flow group kit d.h.w.	1			BI1421 100	M			
38	169–016	Temperature probe NTC d.h.w.	1	KI1042 501			M			
39	H74–528	Screw M5x35 – Hexagon socket cap	1	BI1351 101			F			
40	H74–530	Flow group kit d.h.w. plug	1	BI1351 103			M			
41		Diverter valve actuator	1			BI1431 100	M			
42	H74–538	Diverter valve actuator fixing spring	1	BI1351 111			M			
43	169–015	Fork P.14	4	KI1042 101			M			
44	H74–539	Fork P11	2	BI1351 112			M			
45	H74–540	O–ring gasket 1,90x8,90	2	BI1351 113			M			
46	E00–680	O–ring gasket 2,62x23,47	2	BI1011 107			M			
47		Diverter valve kit	1			BI1491 101	M			

CONTINUATION SHEET

Sheet 3 of 7

Appliance number(s) 47–583–4347–583–44, 47–583–45

(a) Key no.	(b) GC Part Number	(c) Description	(d) No. Off	(e) Makers part number which have a CG number	(f) Maker's old part number which have since been changed	(g) Maker's new part number which DO NOT have a GC number	(h) M B F	(i) Original Supplier	(j) Original Supplier part number	(k) Retail price excl. VAT
48	409–722	Tapping Screw ISO No8 B 4,2x9,5 Recessed Pan Head	34	BI1013 110			F			
		Hardened Steel BS4174 Bright Zinc plate BS1706 Clear								
		Passivated								
49		Water groups assembling plate	1			BI1501 102	M			
50	H20–981	O–ring gasket 2X17	2	BI1262 114			M			
51		Flow group kit c.h.	1			BI1501 100	M			
52	H74–544	By–pass kit	1	BI1351 117			M			
53	H74–545	Primary circuit pressure switch	1	BI1351 118			M			
55	H03–727	Flat gasket 3/8" O.D 15 mm, i.d. 8.5 mm	2	BI1202 105			M			
56	H20–945	O–ring gasket 17,04x4,00	1	BI1212 112			M			
63	H74–575	Flue outlet gasket	1	BI1536 101			M			
64		Condensing heat exchanger – ADVANCE 25C	1			BI1782 101	M			
64 A		Condensing heat exchanger – ADVANCE 30C,	1			BI1782 102	M			
		ADVANCE 35C								
65		Flue temperature probe NTC and safety thermal fuse	1			BI1782 103	M			
66	H50–475	O–ring gasket 1,78x10,82	1	BI1181 110			M			
67		Expansion vessel	1			BI1462 100	B	Zilmet – Italy	13S0000706	
68		Lock–nut	1			BI1462 106	M			
69		Expansion vessel connection pipe	1			BI1562 107	M			
70	H20–996	O–ring gasket 2,62X9,92	1	BI1262 113			M			
71	H20–972	Connection spring	1	BI1262 117			F			
72		Condensate discharge pipe	1			BI1782 106	M			
73		Condensate trap	1			BI1782 107	M			
74	169–104	Grommet	1	BI1002 113			M			
75	H20–990	Fork	1	BI1262 120			M			

CONTINUATION SHEET

Sheet 4 of 7

Appliance number(s) 47–583–4347–583–44, 47–583–45

(a) Key no.	(b) GC Part Number	(c) Description	(d) No. Off	(e) Makers part number which have a CG number	(f) Maker's old part number which have since been changed	(g) Maker's new part number which DO NOT have a GC number	(h) M B F	(i) Original Supplier	(j) Original Supplier part number	(k) Retail price excl. VAT
76		Pump	1			BI1672 100	M	Wilo	YONOS PARA	
77		Pump (motor)	1			BI1672 101	B			
78	E83–114	Pump gasket	1	BI1172 113			M			
79	H20–986	Automatic air purger valve	1	BI1212 107			M			
80		Condensing heat exchanger inlet pipe	1			BI1782 110	M			
81	E83–108	Condensing heat exchanger connection clip	2	BI1172 101						
82	H74–606	O–ring gasket 3x17	4	KI1003 114						
83	E23–759	Screw 2,9x6,5 Recessed Pan Head Hardened Steel	2	BI1002 127			F			
		BS4174 Bright Zinc plate BS1706 Clear Passivated								
84		Condensing heat exchanger outlet pipe– ADVANCE 25C	1			BI1782 108	M			
84 A		Condensing heat exchanger outlet piper	1			BI1782 109	M			
		ADVANCE 30C, ADVANCE 35C								
85	H74–553	Spring mounting temperature probe	1	BI1442 106			M			
86	E83–101	Overheat thermostat	1	BI1172 105			B	Elth	261 105˚C	
87		Rear combustion chamber insulating panel	1			BI1563 100	M			
88		Front combustion chamber insulating panel	1			BI1563 101	M			
89		Combustion chamber gasket	1			BI1503 102	B			
90		Combustion chamber lip gasket	1			BI1503 103	M			
91		Screw M6x12 recessed pan head BZP clear passivated	4			BI1563 107	F			
92		Burner – ADVANCE 25C	1			BI1563 102	B			
92 A		Burner – ADVANCE 30C, ADVANCE 35C	1			BI1563 103	B			
93		Air–gas gasket	1			BI1503 105	M			
94		Flange burner goup	1			BI1503 104	M			
95	H58–678	Electrode gasket	2	BI1293 109			M			
96		Ignition electrode	1			BI1363 103	M			

CONTINUATION SHEET

Sheet 5 of 7

Appliance number(s) 47–583–4347–583–44, 47–583–45

(a) Key no.	(b) GC Part Number	(c) Description	(d) No. Off	(e) Makers part number which have a CG number	(f) Maker's old part number which have since been changed	(g) Maker's new part number which DO NOT have a GC number	(h) M B F	(i) Original Supplier	(j) Original Supplier part number	(k) Retail price excl. VAT
97	H58–681	Screw M4x10 recessed pan head BZP clear passivated	13	BI1293 110			F			
98	H58–683	O–ring gasket 2,62x15,88	1	BI1293 111			M			
99	H58–684	Window (glass)	1	BI1293 112			M			
100	H58–685	Window frame	1	BI1293 113			M			
101	H58–690	Air–gas gasket	1	BI1293 115			M			
102		Cover flange burner group	1			BI1293 120				
103		Screw M5x14 – BZP RPH	5			BI1512 110	F			
104		Detection electrode	1			BI1503 108	M			
105		Air manifold	1			BI1363 100	M			
106		Fan gasket	1			BI1313 111	M			
107		Gas pipe fixing fork	1			BI1453 102	M			
108		Gas pipe – ADVANCE 25C	1			BI1563 105	M			
108 A		Gas pipe – ADVANCE 30C, ADVANCE 35C	1			BI1563 106	M			
109	H08–602	Gas valve on–off operator coils	1	BI1093 107			B	Sit	0.967.158	
110		Gas restrictor NG (natural gas) – ADVANCE 25C	1			BI1563 500	M			
110 A		Gas restrictor NG (natural gas) – ADVANCE 30C,	1			BI1563 501	M			
		ADVANCE 35C								
110 B		Gas restrictor Propane – ADVANCE 25C	1			BI1563 502	M			
110 C		Gas restrictor Propane – ADVANCE 30C, ADVANCE 35C	1			BI1563 503	M			
111		Gas valve	1			BI1313 103	B	Sit	0.848.135	
112	402–124	Screw M4x8 mm Recessed pan head Mild steel BS4183	2	BI1013 114			F			
		Bringht zinc plate BS3382 Clear passiv.								
113		O–ring gasket 2,62X18,72 NBR	1			BI1453 103	M			
114		Fan – ADVANCE 25C	1			BI1503 109	B	LN2–PS NG40M	W940114280	
114 A		Fan – ADVANCE 30C, ADVANCE 35C	1			BI1563 104	B	LN2–PS NG40M	W940114440	

CONTINUATION SHEET

Sheet 6 of 7

Appliance number(s) 47–583–4347–583–44, 47–583–45

(a) Key no.	(b) GC Part Number	(c) Description	(d) No. Off	(e) Makers part number which have a CG number	(f) Maker's old part number which have since been changed	(g) Maker's new part number which DO NOT have a GC number	(h) M B F	(i) Original Supplier	(j) Original Supplier part number	(k) Retail price excl. VAT
115	E90–690	Wall mounting plate	1	BI1084 113			M			
116		Pipe 22 mm dia gas and c.h.	3			BI1164 102	M			
117		Pipe 15 mm dia (bent) d.c.w.	1			BI1164 101	M			
118		Pipe 15 mm dia (bent) d.h.w.	1			BI1164 111	M			
119	E83–136	Tap 3/4" – c.h.	2	BI1084 105			B			
120	E83–137	Tap 1/2" – d.h.w.	2	BI1084 101			B			
121	E83–138	Tap 3/4" – gas	1	BI1084 100			B			
122		Remote/External temp. probe terminal block	1			BI1805 107	B	Odoardo Korner	OK–433/6–NY–LP–SPM	
123		Electric supply/room thermostat terminal block	1			BI2035 108	B	Odoardo Korner	OK–433–FV–LP–SPM 06	
124	E23–792	Fuse 2 AF 250VAC 5x20	2	BI1165 112			B			
125		Main electronic control – ignition p.c.b.	1			BI2445 100	M			
126		Control panel box	1			BI2035 102	M			
127		Pressure gauge	1			BI2445 107	M			
128		Control panel lid	1			BI2445 108	M			
129		Control panel electronic p.c.b.	1			BI2445 104	M			
130		Control panel bracket	1			BI2035 104	M			
131		Cable gland	3			BI2035 106	M			
132		Main electronic p.c.b. box	1			BI2035 107	M			
133		Sensors cable	1			BI2515 100	M			
134		Ignition electrode earth cable	1			BI2265 102	M			
135		Electricity supply to 230V cable	1			BI2515 101	M			
136		Dummy jumper cable	1			BI2045 104	M			
137		Electricity equipment to 230V cable	1			BI2515 103	M			
138		Main electronic control p.c.b. – Control panel electronic	1			BI2045 106	M			
		p.c.b. controls wiring								

CONTINUATION SHEET

Sheet 7 of 7

Appliance number(s) 47–583–4347–583–44, 47–583–45

(a) Key no.	(b) GC Part Number	(c) Description	(d) No. Off	(e) Makers part number which have a CG number	(f) Maker's old part number which have since been changed	(g) Maker's new part number which DO NOT have a GC number	(h) M B F	(i) Original Supplier	(j) Original Supplier part number	(k) Retail price excl. VAT
140	169–110	Flue pipe gasket	1	BI1016 104			M			
141	H40–757	Twin flue cover plate	2	BI1366 114			M			
142	E01–184	Gasket – Air intake twin kit	2	BI1016 101			M			
143		Side case panel	2			BI1556 100	M			
144		Front case panel clip	2			BI1556 103	M			
145		Front case panel	1			BI1556 101	M			
146	405–274	Washer zinc plated 5,5x15 mm	2	BI1556 102			F			

DRAFT BRITSH GAS PART LIST

Date _____

Sheet 1 of 6

Manufacturer Biasi SpA – Italy

Appliance(s) ADVANCE 25S, ADVANCE 30S

GC Appliance Number(s) 41–583–33, 41–583–34

Contract Name _____

Telephone Number _____

(a) Key no.	(b) GC Part Number	(c) Description	(d) No. Off	(e) Makers part number which have a CG number	(f) Maker's old part number which have since been changed	(g) Maker's new part number which DO NOT have a GC number	(h) M B F	(i) Original Supplier	(j) Original Supplier part number	(k) Retail price excl. VAT
		Position of data badge: frame, inner lower side								
		Instructions booklets set	1			BI1913 541	M			
1		Safety valve connection pipe	1			BI1371 101	M			
3	H20–987	Pump connection fork	3	BI1262 116			M			
4		Grommet	2			BI1301 109	M			
6	E83–013	Safety valve 3 bar	1	BI1131 100			B	Watts Intermes	3 bar	
8	H74–542	Fork P26	1	BI1351 115			M			
9	E00–669	Drainage valve	1	BI1011 104			B	Watts Intermes – Caldaro Italy	RSR8 1/4"	
11	E83–144	O–ring gasket 1,78 x 6,75	1	BI1475 119			M			
13	H74–529	O–ring gasket 2,62x15,54	1	BI1351 102			M			
20	H74–531	Fork P21,6	2	BI1351 104			M			
21	H20–970	O–ring gasket 2,62x17.86	2	BI1262 112			M			
25	H74–541	Threaded connection c.h.	1	BI1351 114			M			
26	169–033	Flat gasket 3/4"	7	BI1001 108			M			
27	H74–535	Tapping screw 5x12	3	BI1351 107			F			
31		Return group	1			BI1371 102	M			
32		O–ring gasket 1,78x15,60	1			BI1441 105	M			
40	H74–530	Flow group kit d.h.w. plug	1	BI1351 103			M			
43	169–015	Fork P.14	1	KI1042 101			M			
44	H74–539	Fork P11	1	BI1351 112			M			
45	H74–540	O–ring gasket 1,90x8,90	1	BI1351 113			M			
46	E00–680	O–ring gasket 2,62x23,47	1	BI1011 107			M			
48	409–722	Tapping Screw ISO No8 B 4,2x9,5 Recessed Pan Head	34	BI1013 110			F			
		Hardened Steel BS4174 Bright Zinc plate BS1706 Clear								
		Passivated								

CONTINUATION SHEET

Sheet 2 of 6

Appliance number(s) 41–583–33, 41–583–34

(a) Key no.	(b) GC Part Number	(c) Description	(d) No. Off	(e) Makers part number which have a CG number	(f) Maker's old part number which have since been changed	(g) Maker's new part number which DO NOT have a GC number	(h) M B F	(i) Original Supplier	(j) Original Supplier part number	(k) Retail price excl. VAT
49		Water groups assembling plate	1			BI1491 108	M			
50	H20–981	O–ring gasket 2X17	2	BI1262 114			M			
51		Flow group kit c.h.	1			BI1491 100	M			
52	H74–544	By–pass kit	1	BI1351 117			M			
53	H74–545	Primary circuit pressure switch	1	BI1351 118			M			
54	E23–759	Safety valve connection	1	BI1001 127			M			
55	H03–727	Flat gasket 3/8" O.D 15 mm, i.d. 8.5 mm	2	BI1202 105			M			
56	H20–945	O–ring gasket 17,04x4,00	1	BI1212 112			M			
57		Drainage pipe	1			BI1371 106	M			
58		Flow group kit plug	1			BI1371 105	M			
59	E23–757	Toothed lock washer external 6,4 mm	1	BI1001 124			F			
60	E00–670	Screw M6x8 – BZP RPH	1	BI1001 123			F			
61		O–ring gasket 2,62x11,91	1			BI1301 112	M			
62		By–pass pipe	1			BI1371 103	M			
63	H74–575	Flue outlet gasket	1	BI1536 101			M			
64	H58–660	Condensing heat exchanger – ADVANCE 25S,	1			BI1782 102	M			
		ADVANCE 30S								
65		Flue temperature probe NTC and safety thermal fuse	1			BI1782 103	M			
66	H50–475	O–ring gasket 1,78x10,82	1	BI1181 110			M			
67		Expansion vessel	1			BI1462 100	B	Zilmet – Italy	13S0000706	
68		Lock–nut	1			BI1462 106	M			
69		Expansion vessel connection pipe	1			BI1562 107	M			
70	H20–996	O–ring gasket 2,62X9,92	1	BI1262 113			M			
71	H20–972	Connection spring	1	BI1262 117			F			
72		Condensate discharge pipe	1			BI1782 106	M			

CONTINUATION SHEET

Sheet 3 of 6

Appliance number(s) 41–583–33, 41–583–34

(a) Key no.	(b) GC Part Number	(c) Description	(d) No. Off	(e) Makers part number which have a CG number	(f) Maker's old part number which have since been changed	(g) Maker's new part number which DO NOT have a GC number	(h) M B F	(i) Original Supplier	(j) Original Supplier part number	(k) Retail price excl. VAT
73		Condensate trap	1			BI1782 107	M			
74	169–104	Grommet	1	BI1002 113			M			
75	H20–990	Fork	1	BI1262 120			M			
76		Pump	1			BI1682 100	M	Wilo	YONOS PARA	
77		Pump (motor)	1			BI1672 101	B			
78	E83–114	Pump gasket	1	BI1172 113			M			
79	H20–986	Automatic air purger valve	1	BI1212 107			M			
80		Condensing heat exchanger inlet pipe	1			BI1782 110	M			
81	E83–108	Condensing heat exchanger connection clip	2	BI1172 101						
82	H74–606	O–ring gasket 3x17	4	KI1003 114						
83	E23–759	Screw 2,9x6,5 Recessed Pan Head Hardened Steel	2	BI1002 127			F			
		BS4174 Bright Zinc plate BS1706 Clear Passivated								
84		Condensing heat exchanger outlet piper	1			BI1782 109	M			
		ADVANCE 25S, ADVANCE 30S								
85	H74–553	Spring mounting temperature probe	1	BI1442 106			M			
86	E83–101	Overheat thermostat	1	BI1172 105			B	Elth	261 105˚C	
87		Rear combustion chamber insulating panel	1			BI1563 100	M			
88		Front combustion chamber insulating panel	1			BI1563 101	M			
89		Combustion chamber gasket	1			BI1503 102	B			
90		Combustion chamber lip gasket	1			BI1503 103	M			
91		Screw M6x12 recessed pan head BZP clear passivated	4			BI1563 107	F			
92		Burner – ADVANCE 25S, ADVANCE 30S	1			BI1563 103	B			
93		Air–gas gasket	1			BI1503 105	M			
94		Flange burner goup	1			BI1503 104	M			
95	H58–678	Electrode gasket	2	BI1293 109			M			

CONTINUATION SHEET

Sheet 4 of 6

Appliance number(s) 41–583–33, 41–583–34

(a) Key no.	(b) GC Part Number	(c) Description	(d) No. Off	(e) Makers part number which have a CG number	(f) Maker's old part number which have since been changed	(g) Maker's new part number which DO NOT have a GC number	(h) M B F	(i) Original Supplier	(j) Original Supplier part number	(k) Retail price excl. VAT
96		Ignition electrode	1			BI1363 103	M			
97	H58–681	Screw M4x10 recessed pan head BZP clear passivated	13	BI1293 110			F			
98	H58–683	O–ring gasket 2,62x15,88	1	BI1293 111			M			
99	H58–684	Window (glass)	1	BI1293 112			M			
100	H58–685	Window frame	1	BI1293 113			M			
101	H58–690	Air–gas gasket	1	BI1293 115			M			
102		Cover flange burner group	1			BI1293 120				
103		Screw M5x14 – BZP RPH	5			BI1512 110	F			
104		Detection electrode	1			BI1503 108	M			
105		Air manifold	1			BI1363 100	M			
106		Fan gasket	1			BI1313 111	M			
107		Gas pipe fixing fork	1			BI1453 102	M			
108		Gas pipe – ADVANCE 25S, ADVANCE 30S	1			BI1563 106	M			
109	H08–602	Gas valve on–off operator coils	1	BI1093 107			B	Sit	0.967.158	
110		Gas restrictor NG (natural gas) – ADVANCE 25S,	1			BI1563 501	M			
		ADVANCE 30S								
110 A		Gas restrictor Propane – ADVANCE 25S, ADVANCE 30S	1			BI1563 503	M			
111		Gas valve	1			BI1313 103	B	Sit	0.848.135	
112	402–124	Screw M4x8 mm Recessed pan head Mild steel BS4183	2	BI1013 114			F			
		Bringht zinc plate BS3382 Clear passiv.								
113		O–ring gasket 2,62X18,72 NBR	1			BI1453 103	M			
114		Fan – ADVANCE 25S, ADVANCE 30S	1			BI1563 104	B	LN2–PS NG40M	W940114440	
115	E90–690	Wall mounting plate	1	BI1084 113			M			
116		Pipe 22 mm dia gas and c.h.	3			BI1164 102	M			
119	E83–136	Tap 3/4" – c.h.	2	BI1084 105			B			

CONTINUATION SHEET

Sheet 5 of 6

Appliance number(s) 41–583–33, 41–583–34

(a) Key no.	(b) GC Part Number	(c) Description	(d) No. Off	(e) Makers part number which have a CG number	(f) Maker's old part number which have since been changed	(g) Maker's new part number which DO NOT have a GC number	(h) M B F	(i) Original Supplier	(j) Original Supplier part number	(k) Retail price excl. VAT
121	E83–138	Tap 3/4" – gas	1	BI1084 100			B			
122		Remote/External temp. probe terminal block	1			BI1805 107	B	Odoardo Korner	OK–433/6–NY–LP–SPM	
123		Electric supply/room thermostat terminal block	1			BI2035 108	B	Odoardo Korner	OK–433–FV–LP–SPM 06	
124	E23–792	Fuse 2 AF 250VAC 5x20	2	BI1165 112			B			
125		Main electronic control – ignition p.c.b.	1			BI2445 100	M			
126		Control panel box	1			BI2035 102	M			
127		Pressure gauge	1			BI2445 107	M			
128		Control panel lid	1			BI2445 108	M			
129		Control panel electronic p.c.b.	1			BI2445 104	M			
130		Control panel bracket	1			BI2035 104	M			
131		Cable gland	3			BI2035 106	M			
132		Main electronic p.c.b. box	1			BI2035 107	M			
133		Sensors cable	1			BI2525 100	M			
134		Ignition electrode earth cable	1			BI2265 102	M			
135		Electricity supply to 230V cable	1			BI2525 101	M			
136		Dummy jumper cable	1			BI2045 104	M			
137		Electricity equipment to 230V cable	1			BI2515 103	M			
138		Main electronic control p.c.b. – Control panel electronic	1			BI2045 106	M			
		p.c.b. controls wiring								
139		Sensors cable	1			BI2395 106	M			
140	169–110	Flue pipe gasket	1	BI1016 104			M			
141	H40–757	Twin flue cover plate	2	BI1366 114			M			
142	E01–184	Gasket – Air intake twin kit	2	BI1016 101			M			
143		Side case panel	2			BI1556 100	M			
144		Front case panel clip	2			BI1556 103	M			

CONTINUATION SHEET

Sheet 6 of 6

Appliance number(s) 41–583–33, 41–583–34

(a) Key no.	(b) GC Part Number	(c) Description	(d) No. Off	(e) Makers part number which have a CG number	(f) Maker's old part number which have since been changed	(g) Maker's new part number which DO NOT have a GC number	(h) M B F	(i) Original Supplier	(j) Original Supplier part number	(k) Retail price excl. VAT
145		Front case panel	1			BI1556 101	M			
146	405–274	Washer zinc plated 5,5x15 mm	2	BI1556 102			F			